DUNAVOX

THE WINE COOLING EXPERT

Wine Cooler

I

# DUNAVOX NOBLE-32

DVN-32.85DB.TO

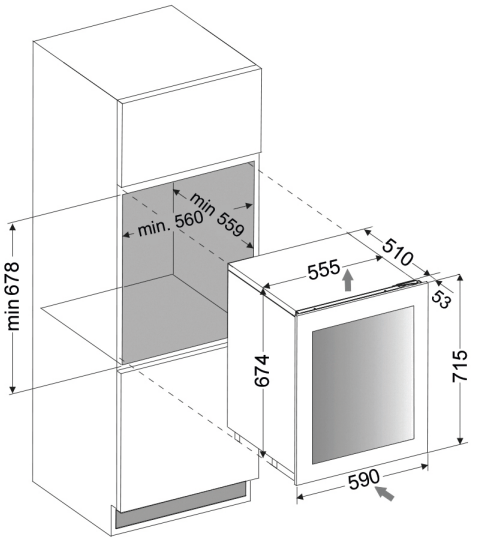


Front View

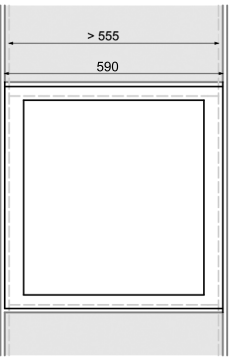


Side View

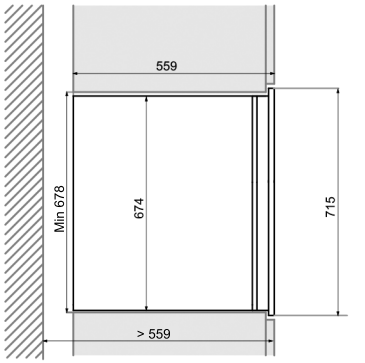


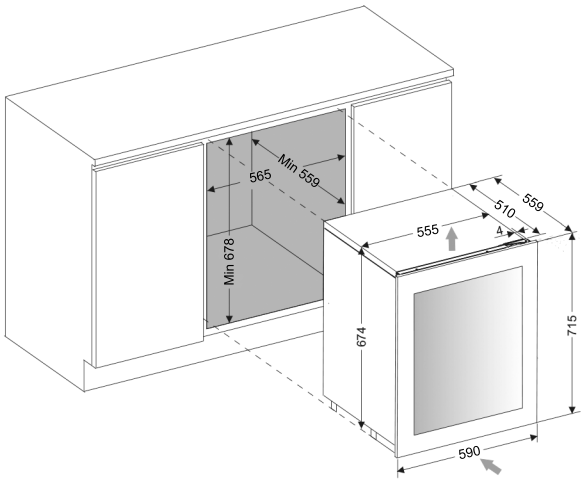


Top View

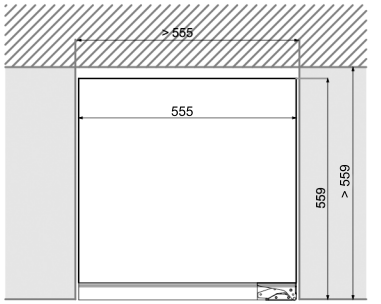


Remove

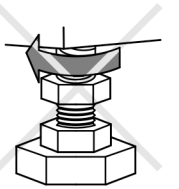

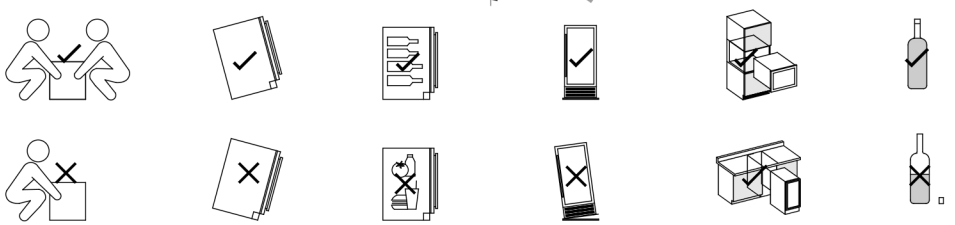

2026.V.1 Copyright Dunavox Kft. All rights reserved. www.dunavox.com